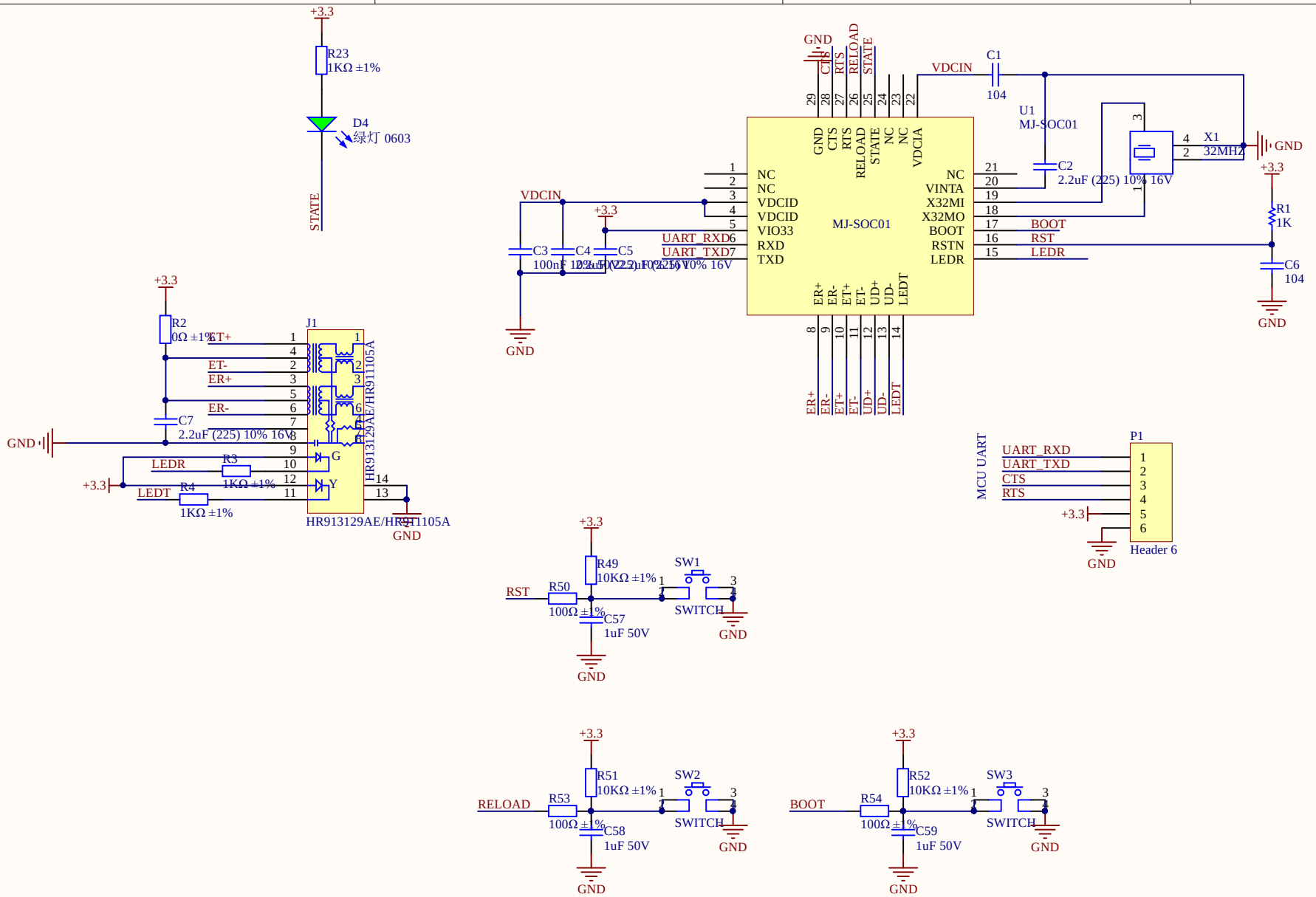

Title		
Size A4	Number	Revision
Date: 2020/11/8	Sheet of	
File: D:\自主研发产品\..\MJ-SocDemo.SchDoc	Drawn By:	